REV	DESCRIPTION	DATE	APPROVED

ROHS Compliant REACH

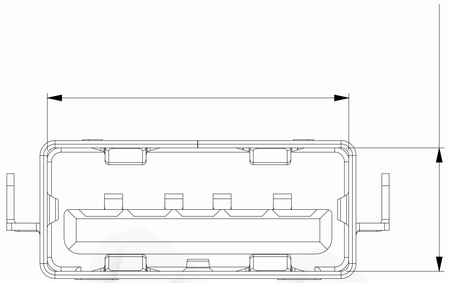

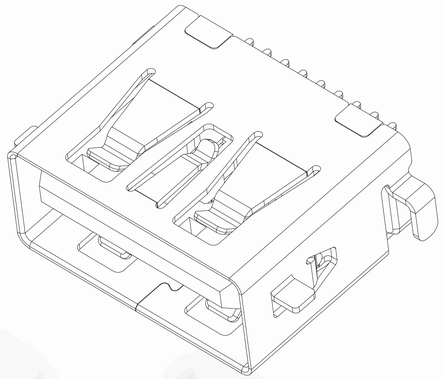

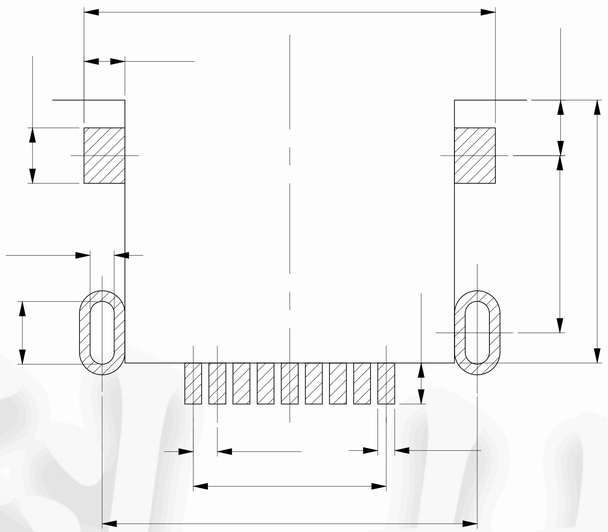

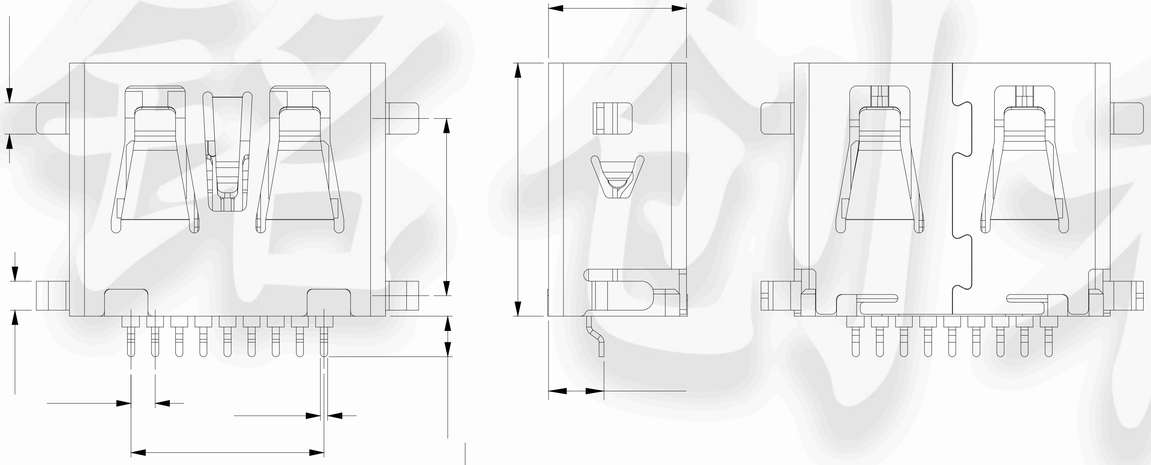

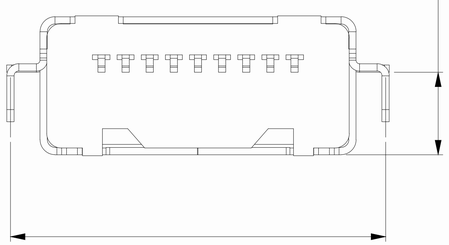

Ω MAX
Ω

二.MATERIAL:
2.1 HOUSING: HIGIH TEMPERATURATURE THERAL PLASTIC.
2.2 CONTACT: COPPER ALLOY.
2.3 SHELL : SPCC.

三.FINISH:
3.1 CONTACT: (SEE P/N.),[50u"] MIN. NICKEL UNDERPLATING OVER ALL.
3.2 SHELL: [50u"] MIN.SOLDERABLITY NICKEL UNDERPLATING OVER ALL.

四.PART NUMBER DESCRIPTION :

REMARK:
C2—铜壳无边
S2—铁壳无边

μ"]GOLD CONTACT AREA
[100μ"]TIN SOLDER AREA
W2—[5μ"]GOLD CONTACT AREA
[100μ"]TIN SOLDER AREA

CUSTOMER DRAWING			铭创科技（东莞）有限公司 Mingchuang Technology (Dongguan) Co., Ltd		
UNITS mm	SCALE 1:1	SHEET	TITLE USB 3.0 AF 沉板2.3 L=10.5 无边		
PROJECTION:	DRAW: DAP				
GENERAL TOLERANCE 0. ±0.25 0.0 ±0.15 0.00 ±0.10 0.° ±2° 0.0° ±1°	CHECK: HWT		MAT'L SEE TABLE	FINISH SEE TABLE	
	APPD: HHM		DWG. NO. 0974.3AF.CB.F59	PART NO.	SIZE A4