| REV | DESCRIPTION | DATE | APPROVED |
|---|---|---|---|
| A | 新板发行 | 2020.11.06 | HHM |

ROHS Compliant REACH

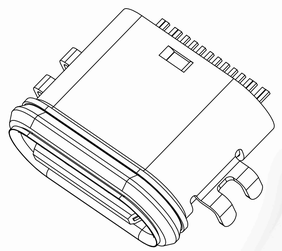

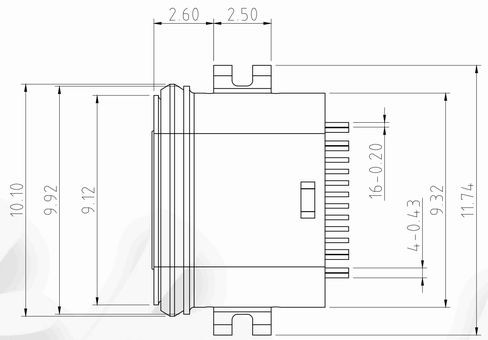


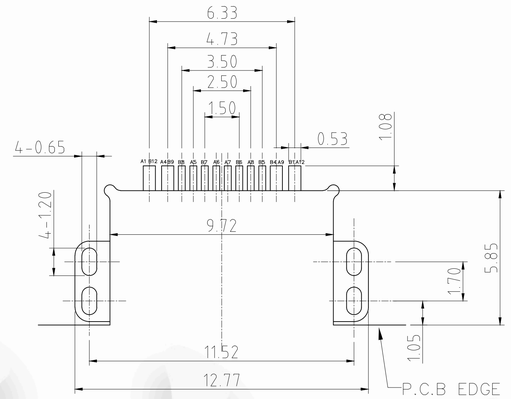


1. MATERIAL SPECIFICATION:
   1.1.HOUSING: HIGH TEMPERATURE RESISTANT PLASTIC,UL94 V-0.
   1.2.CONTACTS: COPPER ALLOY
   1.3.MID PLATE: STAINLESS STEEL
   1.4.FRONT SHELL: STAINLESS STEEL
2. MECHANICAL PERFORMANCE,
   2.1.INSERTION FORCE: 5~20N.
   2.2.REMOVAL FORCE: 6~20N.
   2.3.DURABILITY: 10000 CYCLES.
3. ELECTRICAL PERFORMANCE,
   3.1. CURRENT RATING: 5.0A
   VOLTAGE RATING: 20V
   3.2. LLCR:
   VBUS & GND PINS AND OTHER PINS: 40mΩ/PIN MAX.
   SHIELD: 50mΩ/MAX.
   LLCR MAX. CHANGE OF ALL PINS: 10mΩ.
   3.3.INSULATION RESISTANCE: 100MΩ MIN
   3.4.DIELECTRIC WITHSTAND VOLTAGE,AC 100V FOR 1 MINUTE.
4. ENVIRONMENTAL PERFORMANCE:
   OPERATING TEMPERATURE: -25°C~+85°C.
5. IR REFLOW:
   THE PEAK TEMPERATURE ON THE BOARD SHALL BE MAINTAINED FOR 10 SECONDS AT 260°C.

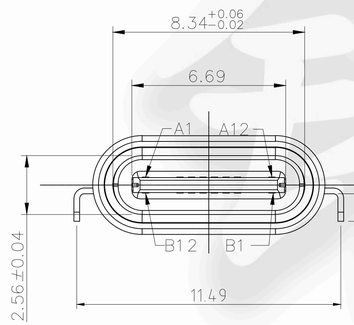


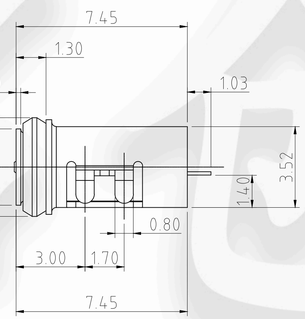


RECOMMENDED PCB LAYOUT(TOP VIEW)
DEFAULT TOLERANCE: ±0.05

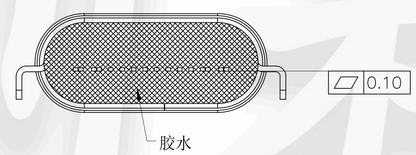


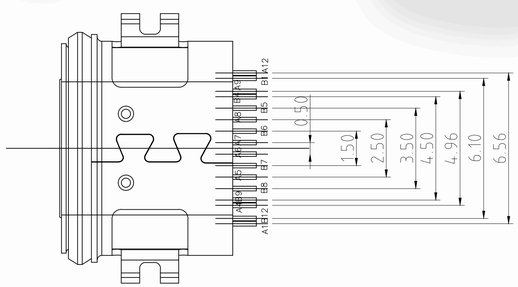


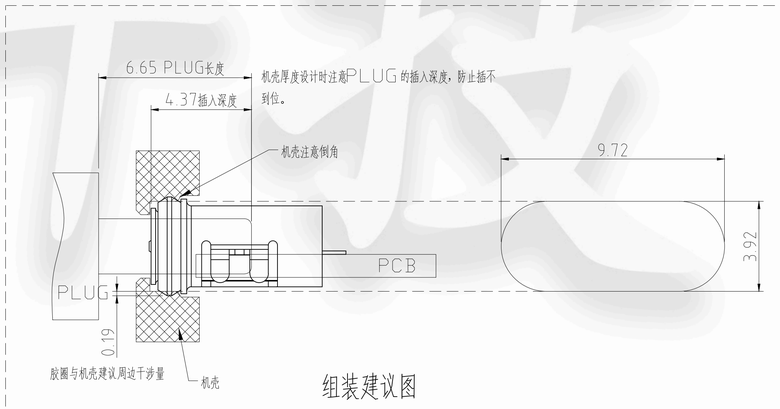


组装建议图

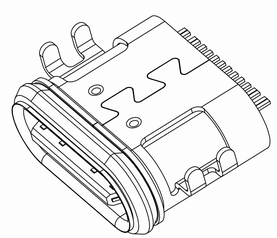

USB TYPE-C PIN ASSIGNMENTS

| PIN NUMBER | SIGNAL NAME | PIN NUMBER | SIGNAL NAME |
|---|---|---|---|
| A1 | GND | B12 | GND |
| A4 | VBUS | B9 | VBUS |
| A5 | CC1 | B8 | SBU2 |
| A6 | Dp1 | B7 | Dn2 |
| A7 | Dn1 | B6 | Dp2 |
| A8 | SBU1 | B5 | CC2 |
| A9 | VBUS | B4 | VBUS |
| A12 | GND | B1 | GND |

CUSTOMER DRAWING

| | | |
|---|---|---|
| UNITS: mm | SCALE: 1:1 | SHEET |
| PROJECTION: | DRAW: DAP | |
| GENERAL TOLERANCE: X. ±0.50 X.° ± 2°; .X ±0.30 .X° ± 1°; .XX ±0.10 .XX° ± 0.5°; .XXX ± 0.05 | CHECK: HWT | |
| | APPD: HHM | |

铭创科技（东莞）有限公司

TITLE: 16PIN 防水TYPE C母座 沉板1.4 L=7.45

| MAT'L | FINISH | |
|---|---|---|
| SEE TABLE | SEE TABLE | |
| DWG. NO. 0499.WPCF.16CB.B9 | PART NO. | SIZE A4 |